DEA-Solver-Pro Newsletter

No. 9
(September 9, 2011)

In Version 8.0 we introduce a new model called "EBM" (epsilon-based measure of efficiency) for measuring technical efficiency. DEA is a data driven tool for measuring efficiency of decision making units (DMU) and shows a sharp contrast to so-called "parametric methods" such as stochastic frontier analysis (SFA). The latter methods assume specific production function forms to be identified. This assumption is not so reasonable in several instances and aspects. Since DEA can deal with multiple inputs vs. multiple outputs relations in a single framework, it is becoming a method of choice for efficiency evaluation. However, DEA has several shortcomings to be explored further. In DEA, we have two measures of technical efficiency with different characteristics: radial and non-radial. Historically, the radial measure, represented by the CCR model was the first DEA model, whereas the non-radial model, represented by the SBM model was a latecomer. For instance, in the input-oriented case, the CCR deals mainly with proportionate reduction of input resources. In other words, if the organisational unit under study has two inputs, this model aims at obtaining the maximum rate of reduction with the same proportion, i.e. a radial contraction in the two inputs that can produce the current outputs. In contrast, the non-radial models put aside the assumption of proportionate contraction in inputs and aim at obtaining maximum rates of reduction in inputs that may discard varying proportions of original input resources.

In this EBM, we propose a composite model which combines both

models in a unified framework. This model has two parameters: one scalar and one vector. In order to determine these two parameters, we introduce a new affinity index associated with inputs or outputs. We apply the principal component analysis (PCA) to thus defined affinity matrix. These two parameters are utilized to unify radial and non-radial models in a single model.

In Version 7.0, we reinforced our collection of DEA models by the addition of Dynamic DEA models. In DEA, there are several methods for measuring efficiency changes over time, e.g. the Window analysis and the Malmquist index. However, they usually neglect carry-over activities between two consecutive terms and only focus on the separate period independently aiming local optimization in a single period, even if these models can take into account the time change effect. In the actual business world, a long time planning and investment is a subject of great concern. For these cases, single period optimization model is not suitable for performance evaluation. To cope with long time point of view, the dynamic DEA model incorporates carry-over activities into the model as depicted below and enables us to measure period specific efficiency based on the long time optimization during the whole period.

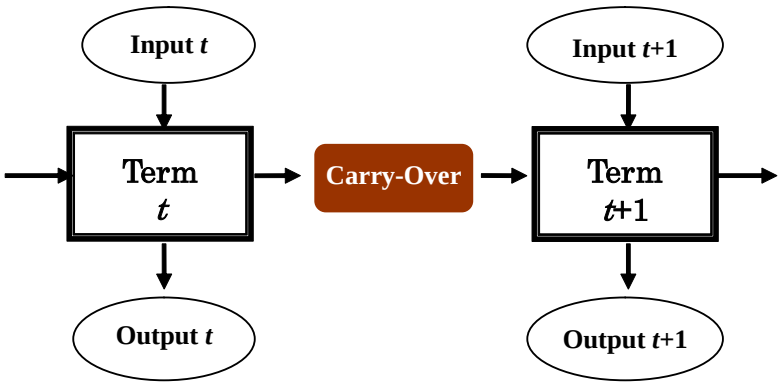

Figure A: Dynamic model

We enforced Network SBM models by adding the uniqueness check of the divisional efficiencies.

In Version 6.0 we added Network DEA (Network SBM) models. Network DEA intends to fortify DEA models in the following way. Traditional DEA models evaluate the relative efficiency of DMUs regarding multiple-inputs vs. multiple-outputs correspondences. Figure B exhibits such traditional DEA models. However, looking into the inside of the DMU, we often find inter-related divisions as exemplified in Figure C. In this example, an output from Division 1 (Div1) comes to Division 2 (Div2) as an input. The three red lines are intermediate products. We call then as “link.” Traditional DEA models cannot deal with links formally, since every activity should belong to inputs or outputs, but not both. These inner structures form a network, and the Network DEA treats these inter-related organizations formally. Using this model, we can identify the relative efficiency of each division as well as the overall efficiency of the DMU. Network DEA serves to clarify the internally-related efficiencies which are usually regarded as “black box” and have not been investigated so far.

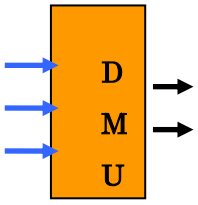

Figure B:

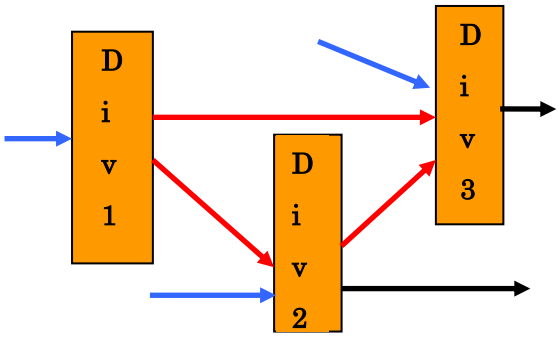

Figure C:

In the Version 5.0, we added our collection of DEA models by the Hybrid model and the Weighted SBM model, and modified the Non-separable Outputs model in the Undesirable Outputs cluster. We also added worksheets “Decomposition” to the SBM-family and

Non-separable Output models. This includes the decomposition of efficiency score into inefficiency of each input/output factor.

The Hybrid model deals with radial and non-radial inputs/outputs in a unified framework. The Weighted SBM model puts weights to slacks in accordance with their importance to management.

In Version 4.1, we enriched our collection of DEA models by the addition of Undesirable Outputs models. In accordance with the global environmental conservation awareness, undesirable outputs of production and social activities, e.g., air pollutants and hazardous waste, have been widely recognized as societal evils. Thus, development of technologies with less undesirable outputs is an important subject of concern in every area of production. DEA usually assumes that producing more outputs relative to less input resources is a criterion of efficiency. In the presence of undesirable outputs, however, technologies with more good (desirable) outputs and less bad (undesirable) outputs relative to less input resources should be recognized as efficient. The Undesirable Model deals with this problem. Please see Newsletter 5.

All DEA models can be classified into four types: (1) Radial, (2) Non-Radial and Oriented, (3) Non-Radial and Non-Oriented and (4) Composite of Radial and Non-radial. 'Radial' means that a proportionate change of input/output values is the main concern and hence it neglects the existence of slacks (input excesses and output shortfalls remaining in the model) as secondary or freely disposable, whereas 'Non-Radial' deals with slacks directly and does not stick to a proportionate change of input/output. 'Oriented' indicates the input or output orientation in evaluating efficiency, i.e., the main target of evaluation is either input reduction or output expansion. For example, input oriented models first aim to reduce input resources to the efficient frontier as far as possible, and then to enlarge output products as the second objective. 'Non-Oriented' models deal with input reduction and output expansion at the same time.

Version 8.0 consists of 41 clusters with 175 models. They are classified into the four categories as displayed below.

Category	Cluster or Model
Radial	CCR, BCC, IRS, DRS, AR, ARG, NCN, NDSC, BND, CAT, SYS, Bilateral, Scale Elasticity, Congestion, Window, Malmquist-Radial, Adjusted Projection, FDH
Non-Radial and Oriented	SBM-Oriented, Super-efficiency-Oriented, Malmquist, NetworkSBM(Oriented), DynamicSBM(Oriented)
Non-Radial and Non-Oriented	Cost, New-Cost, Revenue, New-Revenue, Profit, New-Profit, Ratio, SBM-NonOriented, Super-SBM-NonOriented, Malmquist-C (V, GRS), Undesirable Outputs, Weighted SBM , NetworkSBM(Non-Oriented), DynamicSBM(Non-Oriented), Bilateral
Radial and Non-Radial	Hybrid, EBM

The following 41 clusters and 175 models therein are included.

No.	Cluster	Model
1	CCR	CCR-I, CCR－O
2	BCC	BCC-I, BCC-O
3	IRS	IRS-I, IRS-O
4	DRS	DRS-I, DRS-O
5	GRS	GRS-I, GRS-O
6	AR (assurance region)	AR-I-C, AR-I-V, AR-I-GRS, AR-O-C, AR-O-V, AR-O-GRS
7	ARG (assurance region global)	ARG-I-C, ARG-I-V, ARG-I-GRS, ARG-O-C, ARG-O-V, ARG-O-GRS
8	NCN (non-controllable)	NCN-I-C, NCN-I-V, NCN-O-C, NCN-O-V
9	NDSC (non-discretionary)	NDSC-I-C, NDSC-I-V, NDSC-I-GRS, NDSC-O-C, NDSC-O-V, NDSC-O-GRS
10	BND (bounded variable)	BND-I-C, BND-I-V, BND-I-GRS, BND-O-C, BND-O-V, BND-O-GRS
11	CAT (categorical variable)	CAT-I-C, CAT-I-V, CAT-O-C, CAT-O-V
12	SYS (different systems)	SYS-I-C, SYS-I-V, SYS-O-C, SYS-O-V
13	SBM-Oriented (Slacks-based Measure)	SBM-I-C, SBM-I-V, SBM-I-GRS, SBM-O-C, SBM-O-V, SBM-O-GRS, SBM-AR-I-C, SBM-AR-I-V, SBM-AR-O-C, SBM-AR-O-V
14	SBM-Non Oriented	SBM-C, SBM-V, SBM-GRS, SBM-AR-C, SBM-AR-V
15	Weighted SBM	WeightedSBM-C, WeightedSBM-V, WeightedSBM-I-C, WeightedSBM-I-V, WeightedSBM-O-C, WeightedSBM-O-V
16	Super-SBM-Oriented	Super-SBM-I-C, Super-SBM-I-V, Super-SBM-I-GRS, Super-SBM-O-C, Super-SBM-O-V, Super-SBM-O-GRS
17	Super-SBM-NonOriented	Super-SBM-C, Super-SBM-V, Super-SBM-GRS
18	Super-Radial	Super-CCR-I, Super-CCR-O, Super-BCC-I, Super-BCC-O
19	Cost	Cost-C, Cost-V, Cost-GRS
20	New-Cost	New-Cost-C, New-Cost-V, New-Cost-GRS
21	Revenue	Revenue-C, Revenue-V, Revenue-GRS
22	New-Revenue	New-Revenue-C, New-Revenue-V, New-Revenue-GRS
23	Profit	Profit-C, Profit-V, Profit-GRS
24	New-Profit	New-Profit-C, New-Profit-V, New-Profit-GRS

25	**Ratio (Revenue/Cost)**	**Ratio-C, Ratio-V**
26	**Bilateral**	**Bilateral-CCR-I, Bilateral-BCC-I, Bilateral-SBM-C, Bilateral-SBM-V**
27	**Window**	**Window-I-C, Window-I-V, Window-I-GRS, Window-O-C, Window-O-V, Window-O-GRS**
28	**FDH**	**FDH**
29	**Adjusted Projection**	**Adj-CCR-I, Adj-CCR-O, Adj-BCC-I, Adj-BCC-O, Adj-AR-I-C, Adj-AR-I-V, Adj-AR-O-C, Adj-AR-O-V**
30	**Malmquist-NonRadial**	**Malmquist-I-C, Malmquist-I-V, Malmquist-I-GRS, Malmquist-O-C, Malmquist-O-V, Malmquist-O-GRS, Malmquist-C, Malmquist-V, Malmquist-GRS**
31	**Malmquist-Radial**	**Malmquist-Radial-I-C, Malmquist-Radial-I-V, Malmquist-Radial-I-GRS, Malmquist-Radial-O-C, Malmquist-Radial-O-V, Malmquist-Radial-O-GRS**
32	**Scale Elasticity**	**Elasticity-I, Elasticity-O**
33	**Congestion**	**Congestion**
34	**Undesirable outputs**	**BadOutput-C, BadOutput-V, BadOutput-GRS, NonSeparable-C, NonSeparable-V, NonSeparable-GRS**
35	**Hybrid**	**Hybrid-C, Hybrid-V, Hybrid-I-C, Hybrid-I-V, Hybrid-O-C, Hybrid-O-V**
36	**Network DEA Oriented**	**NetworkSBM-I(O)-C(V)(fixed, free)**
37	**Network DEA Non-Oriented**	**NetwrokSBM-C(V) (fixed, free)**
38	**Dynamic DEA Oriented**	**DynamicSBM-I(O)-C(V)**
39	**Dynamic DEA Non-oriented**	**DynamicSBM-C(V)**
40	**EBM Oriented**	**EBM-I(O)-C(V)**
41	**EBM Non-Oriented**	**EBM-C(V)**

The meanings of the extensions -C, -V and –GRS are as follows. Every DEA model assumes a returns to scale (RTS) characteristics that is represneted by the range (L, U) of the sum of the intensity vector λ . The constant RTS (-C) corresponds to (L=0, U=infinity) and the variable RTS (-V) to (L=1, U=1), respectively. In the models with the extension GRS, we have to supply L and U from keyboard, the defaults being L=0.8 and U=1.2. The increasing RTS (IRS) corresponds to (L=1, U=infinity) and the decreasing RTS (DRS) to (L=0, U=1), respectively. It is recommended to try several sets of (L, U) in order to identify how the RTS chracteristics exerts an influence on the efficiency score. In the Non-Oriented EBM models (EBM-C and EBM-V), we must supply L and U from the keyboard, the defaults being L=U=1.