DEA-Solver-Pro Newsletter

No. 10
(September 22, 2012)

In Version 9.0, we introduce a new model called “DNSBM” (dynamic SBM with network structure). We have already introduced the network SBM (NSBM) and the dynamic SBM (DSBM) models separately. Hence, this model is a composite of these two models. Vertically, we deal with multiple divisions connected by links of network structure within each period and, horizontally, we combine the network structure by means of carry-over activities between two succeeding periods. See Figure A. This model can evaluate (1) the overall efficiency over the observed entire period, (2) dynamic change of period (term) efficiency (3) dynamic change of divisional efficiency and (4) divisional Malmquist index. The model can be implemented in input-, output- or non-(both) oriented forms under the CRS or VRS assumptions on the production possibility set. We can impose the initial condition on the carry-overs.

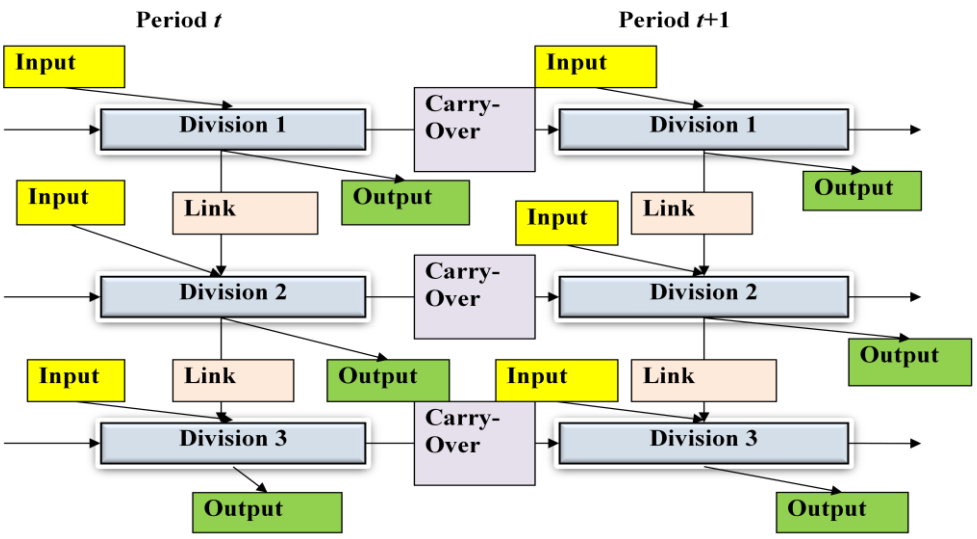

Figure A: Dynamic model with network structure

We can formally deal with bad carry-overs, such as nonperforming loans and dead stock, in this model. We modified the data formats of Dynamic SBM (DSBM) and Network SBM (NSBM) so that they are compatible with DNSBM model. Please see User's Guide Version 9.0.

Another feature of Version 9.0 is the addition of "Global RTS" model. We have already had "Generalized Returns-to-scale" (GRS) model in our repertory in which we demanded to assign the lower bound (*L*) and the upper bound (*U*) of the intensity vector lambda from keyboard. In this new Global RTS model, we determine *L* and *U* from the data. The reason why we introduce this model is that in DEA we have typically two RTS models, i.e. CRS (constant RTS (*L*=0, *U*=infinity), e.g. CCR) and VRS (variable RTS (*L*=1, *U*=1), e.g. BCC) and in some case their efficiency scores differ remarkably. Practitioners often puzzled which one to choose. The Global RTS model can resolve this problem in some extent by determining *L* and *U* from the characteristics of data. Usually, this model gives a score between CRS and VRS, and the most productive scale size (MPSS) is expanded. Please see User's Guide Version 9.0 for details.

In Version 8.0 we introduced a model called "EBM" (epsilon-based measure of efficiency) for measuring technical efficiency. DEA is a data driven tool for measuring efficiency of decision making units (DMU) and shows a sharp contrast to so-called "parametric methods" such as stochastic frontier analysis (SFA). The latter methods assume specific production function forms to be identified. This assumption is not so reasonable in several instances and aspects. Since DEA can deal with multiple inputs vs. multiple outputs relations in a single framework, it is becoming a method of choice for efficiency evaluation. However, DEA has several shortcomings to be explored further. In DEA, we have two measures of technical efficiency with different characteristics: radial and non-radial. Historically, the radial measure, represented by the CCR model was the first DEA model, whereas the non-radial model, represented by the SBM model was a latecomer. For instance, in the input-oriented case, the CCR deals

mainly with proportionate reduction of input resources. In other words, if the organisational unit under study has two inputs, this model aims at obtaining the maximum rate of reduction with the same proportion, i.e. a radial contraction in the two inputs that can produce the current outputs. In contrast, the non-radial models put aside the assumption of proportionate contraction in inputs and aim at obtaining maximum rates of reduction in inputs that may discard varying proportions of original input resources.

In this EBM, we propose a composite model which combines both models in a unified framework. This model has two parameters: one scalar and one vector. In order to determine these two parameters, we introduce a new affinity index associated with inputs or outputs. We apply the principal component analysis (PCA) to thus defined affinity matrix. These two parameters are utilized to unify radial and non-radial models in a single model.

In Version 7.0, we reinforced our collection of DEA models by the addition of Dynamic DEA models. In DEA, there are several methods for measuring efficiency changes over time, e.g. the Window analysis and the Malmquist index. However, they usually neglect carry-over activities between two consecutive terms and only focus on the separate period independently aiming local optimization in a single period, even if these models can take into account the time change effect. In the actual business world, a long time planning and investment is a subject of great concern. For these cases, single period optimization model is not suitable for performance evaluation. To cope with long time point of view, the dynamic DEA model incorporates carry-over activities into the model as depicted below and enables us to measure period specific efficiency based on the long time optimization during the whole period.

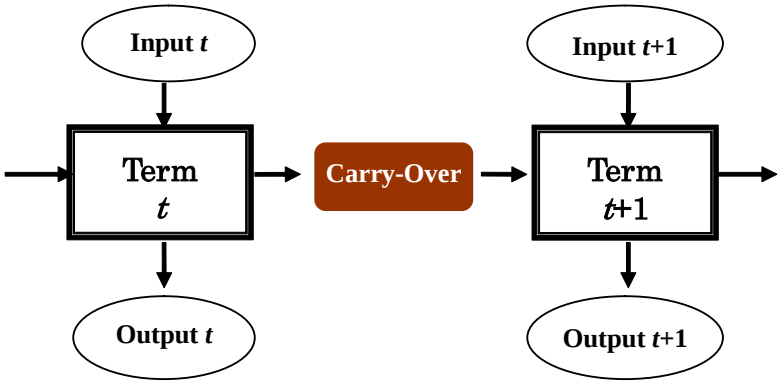

Figure B: Dynamic model

We enforced Network SBM models by adding the uniqueness check of the divisional efficiencies.

In Version 6.0 we added Network DEA (Network SBM) models. Network DEA intends to fortify DEA models in the following way. Traditional DEA models evaluate the relative efficiency of DMUs regarding multiple-inputs vs. multiple-outputs correspondences. Figure C exhibits such traditional DEA models. However, looking into the inside of the DMU, we often find inter-related divisions as exemplified in Figure D. In this example, an output from Division 1 (Div1) comes to Division 2 (Div2) as an input. The three red lines are intermediate products. We call then as “link.” Traditional DEA models cannot deal with links formally, since every activity should belong to inputs or outputs, but not both. These inner structures form a network, and the Network DEA treats these inter-related organizations formally. Using this model, we can identify the relative efficiency of each division as well as the overall efficiency of the DMU. Network DEA serves to clarify the internally-related efficiencies which are usually regarded as “black box” and have not been investigated so far.

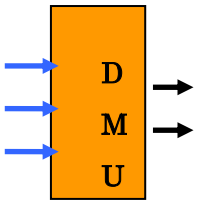

Figure C: Black box

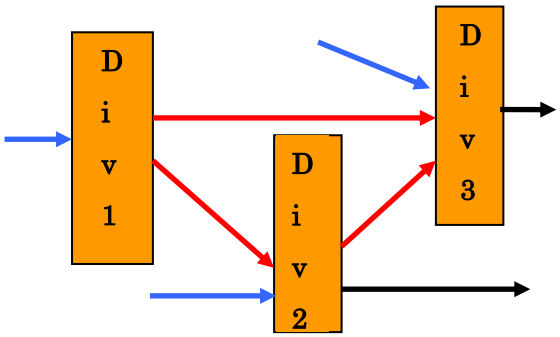

Figure D: Network DEA

In the Version 5.0, we added our collection of DEA models by the Hybrid model and the Weighted SBM model, and modified the Non-separable Outputs model in the Undesirable Outputs cluster. We also added worksheets “Decomposition” to the SBM-family and Non-separable Output models. This includes the decomposition of efficiency score into inefficiency of each input/output factor.

The Hybrid model deals with radial and non-radial inputs/outputs in a unified framework. The Weighted SBM model puts weights to slacks in accordance with their importance to management.

In Version 4.1, we enriched our collection of DEA models by the addition of Undesirable Outputs models. In accordance with the global environmental conservation awareness, undesirable outputs of production and social activities, e.g., air pollutants and hazardous waste, have been widely recognized as societal evils. Thus, development of technologies with less undesirable outputs is an important subject of concern in every area of production. DEA usually assumes that producing more outputs relative to less input resources is a criterion of efficiency. In the presence of undesirable outputs, however, technologies with more good (desirable) outputs and less bad (undesirable) outputs relative to less input resources should be recognized as efficient. The Undesirable Model deals with this

problem. Please see Newsletter 5.

All DEA models can be classified into four types: (1) Radial, (2) Non-Radial and Oriented, (3) Non-Radial and Non-Oriented and (4) Composite of Radial and Non-radial. 'Radial' means that a proportionate change of input/output values is the main concern and hence it neglects the existence of slacks (input excesses and output shortfalls remaining in the model) as secondary or freely disposable, whereas 'Non-Radial' deals with slacks directly and does not stick to a proportionate change of input/output. 'Oriented' indicates the input or output orientation in evaluating efficiency, i.e., the main target of evaluation is either input reduction or output expansion. For example, input oriented models first aim to reduce input resources to the efficient frontier as far as possible, and then to enlarge output products as the second objective. 'Non-Oriented' models deal with input reduction and output expansion at the same time.

Version 9.0 consists of 45 clusters. They are classified into the four categories as displayed below.

Category	Cluster or Model
Radial	CCR, BCC, IRS, DRS, AR, ARG, NCN, NDSC, BND, CAT, SYS, Bilateral, Scale Elasticity, Congestion, Window, Malmquist-Radial, Adjusted Projection, FDH
Non-Radial and Oriented	SBM-Oriented, Super-efficiency-Oriented, Malmquist, NetworkSBM(Oriented), DynamicSBM(Oriented), DynamicNetworkSBM(Oriented)
Non-Radial and Non-Oriented	Cost, New-Cost, Revenue, New-Revenue, Profit, New-Profit, Ratio, SBM-NonOriented, Super-SBM-NonOriented, Malmquist-C (V, GRS), Undesirable Outputs, Weighted SBM , NetworkSBM(NonOriented), DynamicSBM(NonOriented), Bilateral, DynamicNetworkSBM(NonOriented)
Radial and Non-Radial	Hybrid, EBM

The following 45 clusters and 174 models therein are included.

No.	Cluster	Model
1	**CCR**	**CCR-I, CCR－O**
2	**BCC**	**BCC-I, BCC-O**
3	**IRS**	**IRS-I, IRS-O**
4	**DRS**	**DRS-I, DRS-O**
5	**GRS**	**GRS-I, GRS-O**
6	**AR (assurance region)**	**AR-I-C, AR-I-V, AR-I-GRS, AR-O-C, AR-O-V, AR-O-GRS**
7	**ARG (assurance region global)**	**ARG-I-C, ARG-I-V, ARG-I-GRS, ARG-O-C, ARG-O-V, ARG-O-GRS**

8	**NCN (non-controllable)**	**NCN-I-C, NCN-I-V, NCN-O-C, NCN-O-V**
9	**NDSC (non-discretionary)**	**NDSC-I-C, NDSC-I-V, NDSC-I-GRS, NDSC-O-C, NDSC-O-V, NDSC-O-GRS**
10	**BND (bounded variable)**	**BND-I-C, BND-I-V, BND-I-GRS, BND-O-C, BND-O-V, BND-O-GRS**
11	**CAT (categorical variable)**	**CAT-I-C, CAT-I-V, CAT-O-C, CAT-O-V**
12	**SYS (different systems)**	**SYS-I-C, SYS-I-V, SYS-O-C, SYS-O-V**
13	**SBM-Oriented (Slacks-based Measure)**	**SBM-I-C, SBM-I-V, SBM-I-GRS, SBM-O-C, SBM-O-V, SBM-O-GRS, SBM-AR-I-C, SBM-AR-I-V, SBM-AR-O-C, SBM-AR-O-V**
14	**SBM-Non Oriented**	**SBM-C, SBM-V, SBM-GRS, SBM-AR-C, SBM-AR-V**
15	**Weighted SBM**	**WeightedSBM-C, WeightedSBM-V, WeightedSBM-I-C, WeightedSBM-I-V, WeightedSBM-O-C, WeightedSBM-O-V**
16	**Super-SBM-Oriented**	**Super-SBM-I-C, Super-SBM-I-V, Super-SBM-I-GRS, Super-SBM-O-C, Super-SBM-O-V, Super-SBM-O-GRS**
17	**Super-SBM-NonOriented**	**Super-SBM-C, Super-SBM-V, Super-SBM-GRS**
18	**Super-Radial**	**Super-CCR-I, Super-CCR-O, Super-BCC-I, Super-BCC-O**
19	**Cost**	**Cost-C, Cost-V, Cost-GRS**
20	**New-Cost**	**New-Cost-C, New-Cost-V, New-Cost-GRS**
21	**Revenue**	**Revenue-C, Revenue-V, Revenue-GRS**
22	**New-Revenue**	**New-Revenue-C, New-Revenue-V, New-Revenue-GRS**
23	**Profit**	**Profit-C, Profit-V, Profit-GRS**
24	**New-Profit**	**New-Profit-C, New-Profit-V, New-Profit-GRS**
25	**Ratio (Revenue/Cost)**	**Ratio-C, Ratio-V**
26	**Bilateral**	**Bilateral-CCR-I, Bilateral-BCC-I, Bilateral-SBM-C, Bilateral-SBM-V**
27	**Window**	**Window-I-C, Window-I-V, Window-I-GRS, Window-O-C, Window-O-V, Window-O-GRS**
28	**FDH**	**FDH**
29	**Adjusted Projection**	**Adj-CCR-I, Adj-CCR-O, Adj-BCC-I, Adj-BCC-O, Adj-AR-I-C, Adj-AR-I-V, Adj-AR-O-C, Adj-AR-O-V**
30	**Malmquist-NonRadial**	**Malmquist-I-C, Malmquist-I-V, Malmquist-I-GRS, Malmquist-O-C, Malmquist-O-V, Malmquist-O-GRS, Malmquist-C, Malmquist-V, Malmquist-GRS**
31	**Malmquist-Radial**	**Malmquist-Radial-I-C, Malmquist-Radial-I-V, Malmquist-Radial-I-GRS, Malmquist-Radial-O-C, Malmquist-Radial-O-V, Malmquist-Radial-O-GRS**
32	**Scale Elasticity**	**Elasticity-I, Elasticity-O**
33	**Congestion**	**Congestion**
34	**Undesirable outputs**	**BadOutput-C, BadOutput-V, BadOutput-GRS, NonSeparable-C, NonSeparable-V, NonSeparable-GRS**
35	**Hybrid**	**Hybrid-C, Hybrid-V, Hybrid-I-C, Hybrid-I-V, Hybrid-O-C, Hybrid-O-V**
36	**Network DEA Oriented**	**NetworkSBM-I(O)-C(V)**
37	**Network DEA Non-Oriented**	**NetwrokSBM-C(V)**
38	**Dynamic DEA Oriented**	**DynamicSBM-I(O)-C(V)**
39	**Dynamic DEA Non-oriented**	**DynamicSBM-C(V)**

40	**EBM Oriented**	**EBM-I(O)-C(V)**
41	**EBM Non-Oriented**	**EBM-C(V)**
42	**DynamicNetworkSBM Oriented**	**DNSBM-I-C(V), DNSBM-O-C(V)**
43	**DynamicNetworkSBM NonOriented**	**DNSBM-C(V)**
44	**GlobalRTS-SBM**	**GlobalRTS-SBM-I(O)-C(V), GlobalRTS-C(V)**
45	**GlobalRTS-Radial**	**GlobalRTS-Radial-I(O)-C(V)**

The meanings of the extensions -C, -V and –GRS are as follows. Every DEA model assumes a returns to scale (RTS) characteristics that is represneted by the range (*L, U*) of the sum of the intensity vector λ . The constant RTS (-C) corresponds to (*L*=0, *U*=infinity) and the variable RTS (-V) to (*L*=1, *U*=1), respectively. In the models with the extension GRS, we have to supply L and U from keyboard, the defaults being *L*=0.8 and *U*=1.2. The increasing RTS (IRS) corresponds to (*L*=1, *U*=infinity) and the decreasing RTS (DRS) to (*L*=0, *U*=1), respectively. It is recommended to try several sets of (*L, U*) in order to identify how the RTS chracteristics exerts an influence on the efficiency score. In the Non-Oriented EBM models (EBM-C and EBM-V), we must supply *L* and *U* from the keyboard, the defaults being *L*=*U*=1.

The Global TRS model introduced in this Version determines *L* and *U* from the dataset.